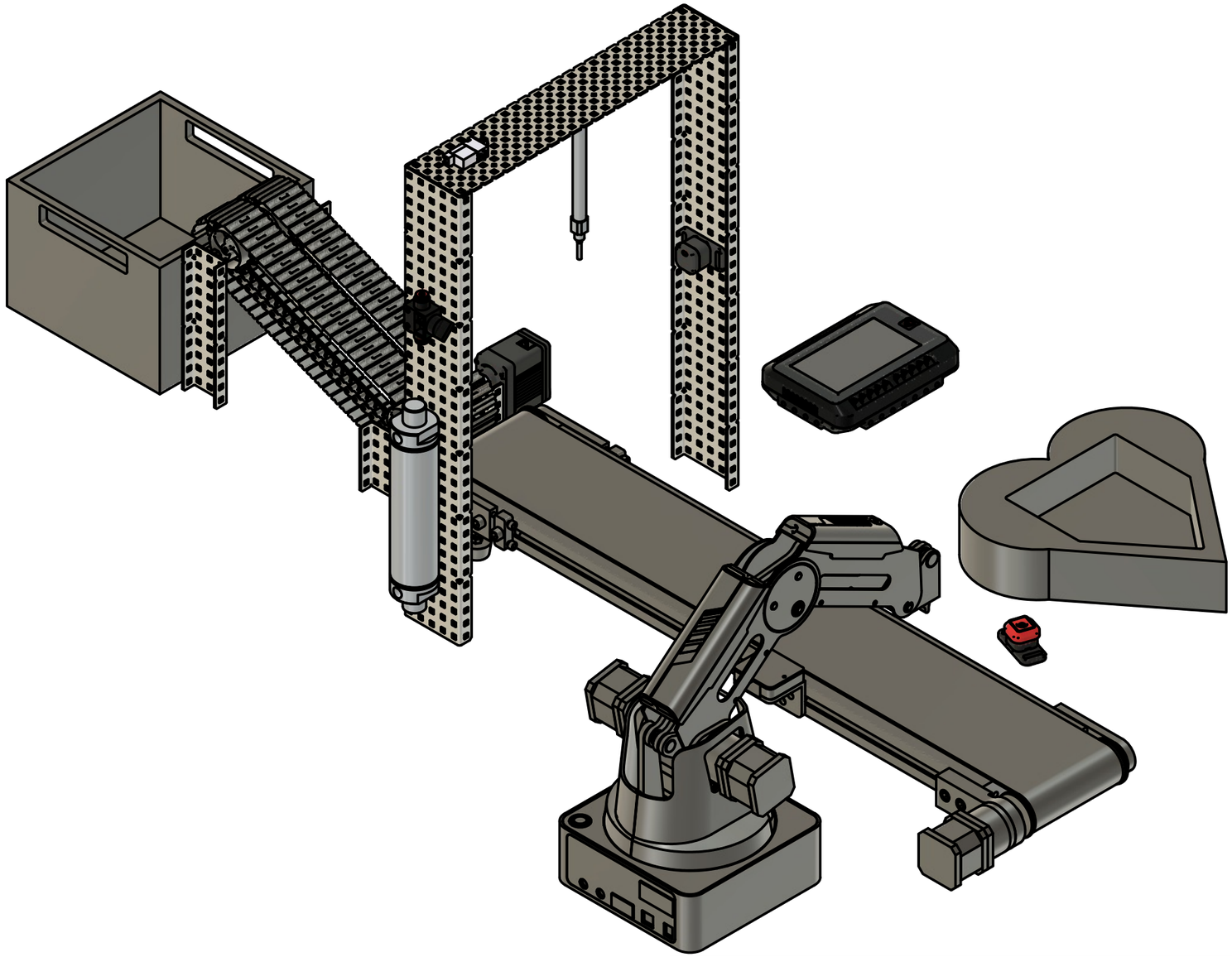

	PROJECT Factory Project				
	TITLE Assembly Rotated to showcase other components				
APPROVED	SIZE	CODE	DWG NO		REV
CHECKED	B		2/2		A
DRAWN Matthew Jeide 2/27/26	SCALE 1:4		WEIGHT		SHEET 1/1